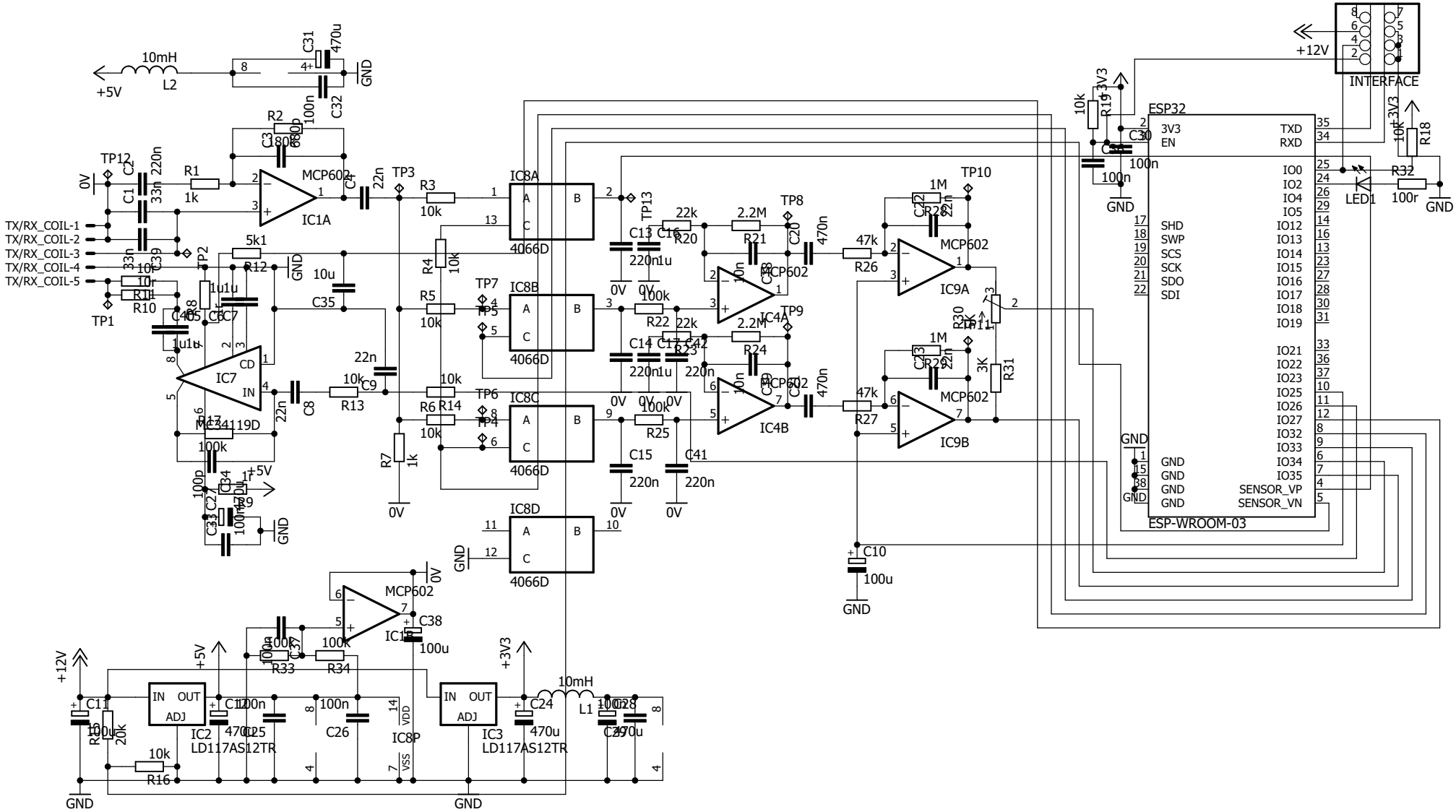
TX/RX_COIL-1
TX/RX_COIL-2
TX/RX_COIL-3
TX/RX_COIL-4
TX/RX_COIL-5
+5V
10mH
L2
C31
470u
C32
100n
GND
R2
180k
C3
680p
MCP602
IC1A
C4
22n
TP12
TP1
TP2
TP3
TP6
TP7
TP8
TP9
TP10
TP11
TP13
IC8A
IC8B
IC8C
IC8D
4066D
IC7
MC34119D
IC4A
IC4B
IC9A
IC9B
IC8P
IC1B
IC2
LD117AS12TR
IC3
LD117AS12TR
+12V
+3V3
0V
INTERFACE
ESP32
3V3
EN
TXD
RXD
SHD
SWP
SCS
SCK
SDO
SDI
GND
SENSOR_VP
SENSOR_VN
ESP-WROOM-03
LED1
R32
100r
R18
10k
R19
R30
R31
3K
C10
100u